LIST OF PARTS			
ITEM	DESCRIPTION	MATERIAL	QTY.
1	ASSEMBLY - BONNET	-	1
2	BODY - SCREWED	-	1
3	HEX CAP SCREWS	-	4
4	NUTS	-	4
5	PLATE, IDENTIFICATION	STN STL	1
6	SCREW, DRIVE	CARB STL	2
7	SPINDLE, YOKE MOUNTED	STN STL	1
8	YOKE	DI	1

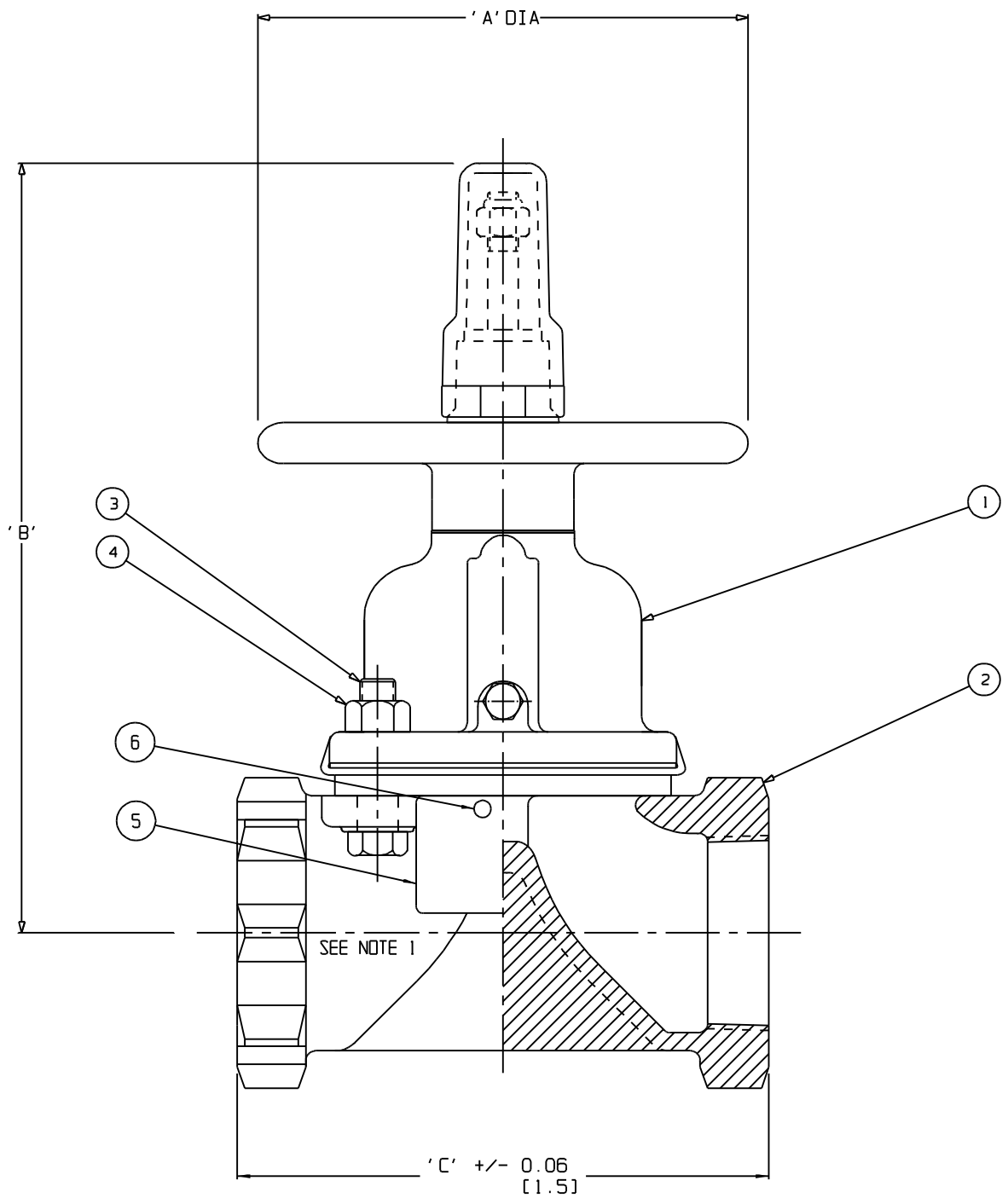

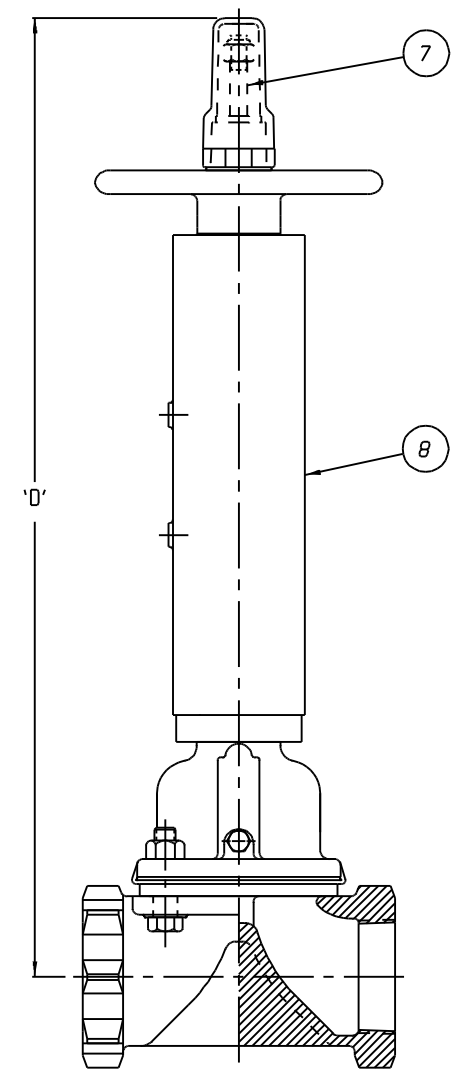

YOKE MOUNTED
SCALE 1:2

NOTE:
1. VALVE IS BI-DIRECTIONAL (NO FLOW ARROW)

VALVE SIZE	'A' DIA	'B'	'C'	'D'
00.50	3.00 [76.2]	4.03 [102.4]	2.50 [63.5]	11.53 [292.9]
00.75	3.00 [76.2]	5.02 [127.5]	3.25 [82.6]	12.52 [318.0]
01.00	3.00 [76.2]	6.01 [152.7]	4.25 [108.0]	16.01 [406.7]
01.25 01.50	6.00 [152.4]	9.08 [230.6]	5.50 [139.7]	19.08 [484.6]
02.00	6.00 [152.4]	9.57 [243.1]	6.50 [165.1]	19.57 [497.1]
02.50	7.75 [196.9]	11.95 [303.5]	8.00 [203.2]	21.95 [557.5]
03.00	7.75 [196.9]	12.49 [317.2]	10.00 [254.0]	22.49 [571.2]

UNLESS OTHERWISE SPECIFIED, DIMENSIONS NOT SHOWN IN BRACKETS [] ARE IN INCHES. DIMENSIONS SHOWN IN BRACKETS [] ARE IN MILLIMETERS.

ENGRD VALVES ORDER: - ITEM: -
FIGURE NO.: -
-
CUSTOMER: -
CUSTOMER P.O.: -

THIRD ANGLE PROJECTION

ALL DIMENSIONS SHOWN ON THIS DRAWING ARE FOR REFERENCE ONLY

	DATE	BY
DWN	08/28/15	DJS
CHKD	08/28/15	STD
APVD	08/28/15	STD

VALVE OUTLINE
WEIR 00.50 THRU 03.00
HWD
W/SCREWED ENDS
-
-

ITT Engineered Valves www.engvalves.com

D 000000-000 SHEET 1 OF 1 REV -

MASTER DWG: 002994-1/1/E ECN# 16106 ISSUED BY: - CERT BY: -

CD_EV_D 07/20/07