LIST OF PARTS			
ITEM	DESCRIPTION	MATERIAL	QTY.
1	ASSEMBLY, ADVANTAGE ACTUATOR	PLASTIC	1
2	BODY, SPIGOT - DIN	PLASTIC	1
3	WASHER	STN. STL.	4
4	SCREW, HEX. HD. CAP	STN. STL.	4

NOTES:
1. VALVE IS BI-DIRECTIONAL (NO FLOW ARROW).
*2. STROKE OF 02.00 VALVE WITH DIRECT ACTING (A116) IS REDUCED TO 0.88 [22.4]. ALL OTHER 02.00 VALVES HAVE STANDARD 1.12 [28.4] STROKE.

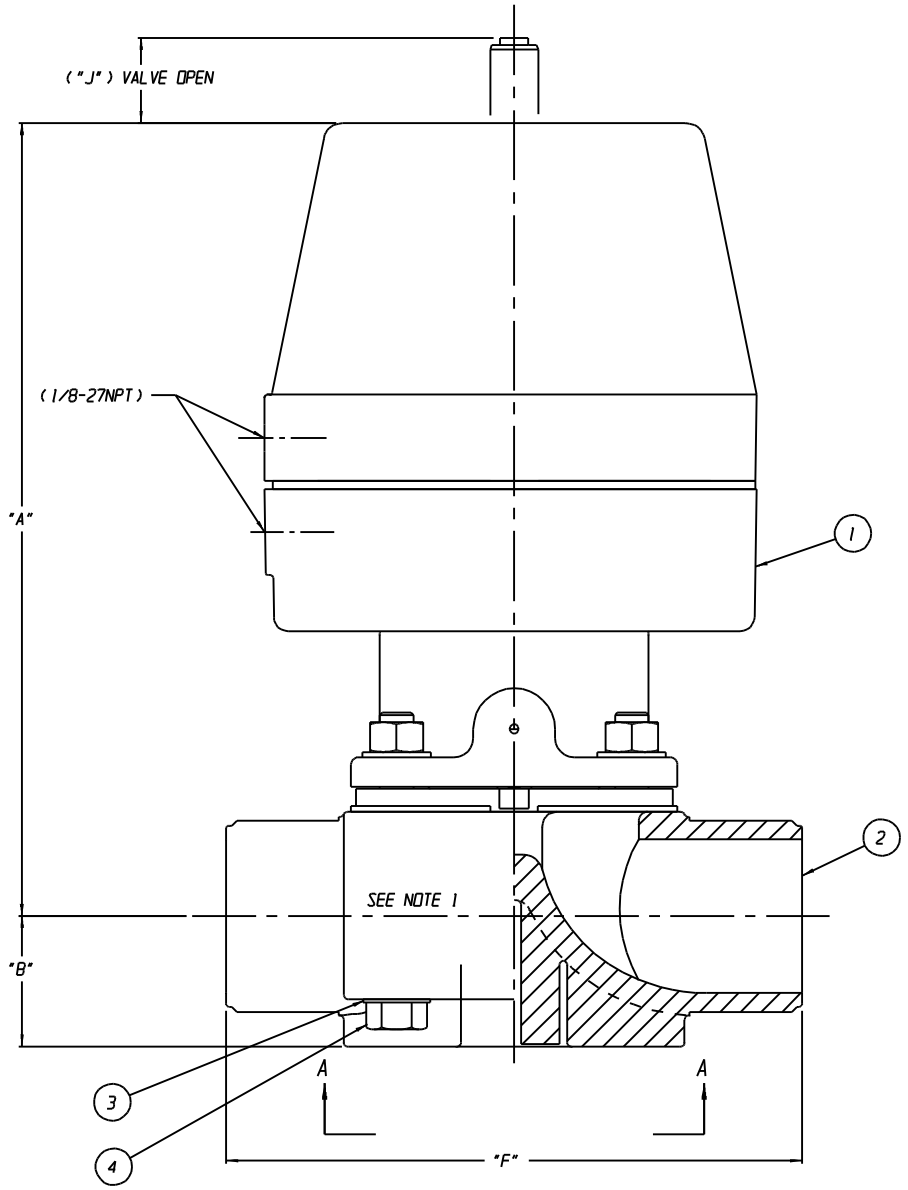

	BODY SIZE	ACTUATOR SERIES	"A"	"B"	"C"	"D"	"E"	"F"	"G"	"H" THREAD	"J"
	00.50	05	4.78 [121.4]	0.72 [18.3]	1.84 [46.7]	3.00 [76.2]	3.00 [76.2]	4.01 [101.9]	1.00 [25.4]	10-32UNF X .394 DP	0.33 [8.4]
	00.50	08	5.43 [137.9]	0.72 [18.3]	2.28 [57.9]	4.53 [115.1]	3.88 [98.6]				0.28 [7.1]
	00.75	08	5.78 [146.8]	0.81 [20.6]				5.51 [139.9]			0.41 [10.4]
	01.00	08	6.14 [156.0]	1.02 [25.9]				5.51 [139.9]			0.57 [14.5]
	01.00	16	9.03 [229.4]	1.02 [25.9]	3.25 [82.5]	6.31 [160.3]	5.94 [150.9]				0.53 [13.5]
	01.25 01.50	16	9.82 [249.4]	1.34 [34.0]				7.06 [179.3]	1.75 [44.4]	1/4-20UNC X .551 DP	0.86 [21.8]
*	02.00	16 DR	10.27 [260.9]	1.23 [31.2]				7.63 [193.8]			0.88 [22.4]
*	02.00	16 DB,RV									1.12 [28.4]

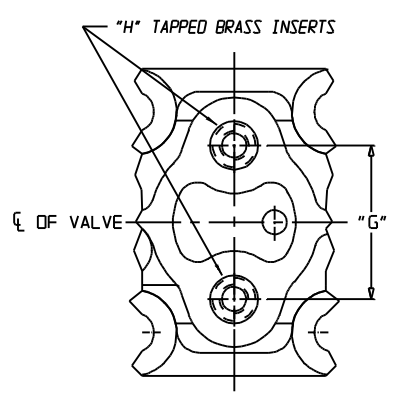

VIEW "A - A"

TOP VIEW

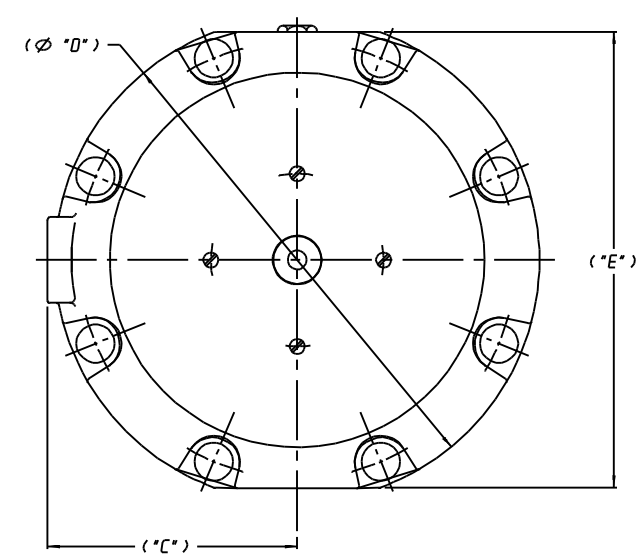

UNLESS OTHERWISE SPECIFIED, DIMENSIONS NOT SHOWN IN BRACKETS [] ARE IN INCHES. DIMENSIONS SHOWN IN BRACKETS [] ARE IN MILLIMETERS.

ENGRD VALVES ORDER: - ITEM: -
FIGURE NO.: -
-
CUSTOMER: -
CUSTOMER P.O.: -

THIRD ANGLE PROJECTION

ALL DIMENSIONS SHOWN ON THIS DRAWING ARE FOR REFERENCE ONLY

	DATE	BY
DWN	01/30/15	DJS
CHKD	01/30/15	STD
APVD	01/30/15	STD

VALVE OUTLINE
WEIR 00.50 - 02.00
PLASTIC BODIES
W/ SPIGOT - DIN ENDS
& ADVANTAGE ACTUATOR
-

MASTER DWG: 003098-1/1/C ECN# 15734

ITT Engineered Valves www.engvalves.com

D 000000-000 SHEET 1 OF 1 REV -

ISSUED BY: - CERT BY: -

CD_EV_D 07/20/07