VALVE SIZE	A	B	B1	C	C1	D	E	F	F1	G	G1	H	J	J1	K	L	M	N	P	P1	Q	R	S	S1
1/4" BP/BT	1.63 [41,3]	(2.38) [60,3]	(2.01) [50,9]	(5.88) [149,2]	(5.51) [139,8]	2.75 [69,9]	(11.96) [303,8]	4.34 [110,1]	3.34 [84,7]	(2.54) [64,4]	(1.04) [26,3]	(1.50) [38,1]	(5.16) [131,1]	(4.16) [105,7]	(2.63) [66,7]	(5.38) [136,7]	(2.76) [70,0]	(2.63) [66,7]	(2.00) [50,8]	(1.00) [25,4]	(2.86) [72,6]	(2.63) [66,7]	(3.32) [84,2]	(2.32) [58,8]
3/8" BP/BT	1.63 [41,3]	(2.38) [60,3]	(2.01) [50,9]	(5.88) [149,2]	(5.51) [139,8]	2.75 [69,9]	(12.62) [320,5]	4.50 [114,3]	3.50 [88,9]	(2.70) [68,6]	(1.20) [30,5]	(1.50) [38,1]	(5.33) [135,3]	(4.33) [109,9]	(2.63) [66,7]	(5.71) [145,1]	(3.09) [78,4]	(2.63) [66,7]	(2.00) [50,8]	(1.00) [25,4]	(3.09) [78,5]	(2.63) [66,7]	(3.48) [88,4]	(2.48) [63,0]
1/2" BP/BT	1.63 [41,3]	(2.38) [60,3]	(2.01) [50,9]	(6.25) [158,8]	(5.88) [149,4]	3.13 [79,4]	(13.24) [336,3]	4.91 [124,6]	3.66 [92,9]	(2.73) [69,3]	(0.98) [24,9]	(1.75) [44,5]	(5.73) [145,5]	(4.48) [113,8]	(3.00) [76,2]	(6.02) [152,9]	(3.02) [76,7]	(3.00) [76,2]	(2.25) [57,2]	(1.00) [25,4]	(3.31) [84,1]	(3.00) [76,2]	(3.89) [98,7]	(2.64) [67,0]
1/2" PF	1.63 [41,3]	(2.56) [65,1]	(2.19) [55,7]	(6.63) [168,3]	(6.26) [158,9]	3.13 [79,4]	(14.39) [365,5]	5.00 [127,0]	3.75 [95,2]	(3.07) [77,9]	(1.32) [33,5]	(1.75) [44,5]	(6.07) [154,1]	(4.82) [122,4]	(3.00) [76,2]	(6.42) [163,0]	(3.42) [86,8]	(3.00) [76,2]	(2.25) [57,2]	(1.00) [25,4]	(3.31) [84,1]	(3.00) [76,2]	(3.68) [93,5]	(2.43) [61,7]
3/4"	1.63 [41,3]	(2.81) [71,4]	(2.44) [62,0]	(7.13) [181,0]	(6.76) [171,6]	3.13 [79,4]	(15.55) [395,0]	5.17 [131,3]	3.92 [99,5]	(3.39) [86,1]	(1.64) [41,6]	(1.75) [44,5]	(6.39) [162,3]	(5.14) [130,5]	(3.00) [76,2]	(6.89) [174,9]	(3.89) [98,7]	(3.00) [76,2]	(2.25) [57,2]	(1.00) [25,4]	(3.47) [88,1]	(3.00) [76,2]	(3.66) [92,9]	(2.41) [61,2]
1"	1.63 [41,3]	(3.00) [76,2]	(2.63) [66,8]	(7.50) [190,5]	(7.13) [181,1]	3.13 [79,4]	(16.77) [426,0]	5.34 [135,7]	4.22 [107,1]	(3.73) [94,7]	(2.10) [53,4]	(1.63) [41,3]	(6.73) [170,9]	(5.60) [142,3]	(3.00) [76,2]	(7.38) [187,4]	(4.38) [111,2]	(3.00) [76,2]	(2.25) [57,2]	(1.13) [28,6]	(3.62) [92,0]	(3.00) [76,2]	(3.62): [92,1]	(2.50) [63,5]
1-1/2"	1.63 [41,3]	(3.44) [87,3]	(3.07) [77,9]	(9.13) [231,8]	(8.76) [222,4]	3.88 [98,4]	(21.53) [546,9]	6.48 [164,7]	5.42 [137,7]	(4.50) [114,2]	(2.93) [74,5]	(1.56) [39,7]	(8.25) [209,5]	(7.18) [182,5]	(3.75) [95,3]	(9.48) [240,9]	(5.73) [145,7]	(3.75) [95,3]	(2.50) [63,5]	(1.44) [36,5]	(4.68) [118,9]	(3.75) [95,3]	(4.31) [109,4]	(3.24) [82,4]
2"	1.88 [47,6]	(4.00) [101,6]	(3.38) [85,9]	(11.00) [279,4]	(10.38) [263,7]	4.88 [123,8]	(26.90) [683,3]	8.05 [204,4]	6.80 [172,6]	(5.41) [137,5]	(3.66) [93,0]	(1.75) [44,5]	(10.16) [258,1]	(8.91) [226,4]	(4.75) [120,7]	(11.91) [302,6]	(7.16) [181,9]	(4.75) [120,7]	(3.00) [76,2]	(1.75) [44,5]	(5.99) [152,2]	(4.75) [120,7]	(5.43) [137,9]	(4.18) [106,1]
2-1/2"	1.88 [47,6]	(4.94) [125,4]	(4.32) [109,7]	(13.63) [346,1]	(13.01) [330,3]	5.63 [142,9]	(35.72) [907,3]	9.67 [245,6]	8.36 [212,3]	(7.49) [190,3]	(5.68) [144,3]	(1.81) [46,0]	(12.99) [330,0]	(11.68) [296,7]	(5.50) [139,7]	(15.45) [392,4]	(9.95) [252,7]	(5.50) [139,7]	(3.38) [85,7]	(2.06) [52,4]	(7.11) [180,5]	(5.50) [139,7]	(5.56) [141,3]	(4.25) [107,9]
3"	1.88 [47,6]	(4.94) [125,4]	(4.32) [109,7]	(14.38) [365,1]	(13.76) [349,4]	6.38 [161,9]	(37.62) [955,5]	10.55 [268,1]	9.30 [236,3]	(7.42) [188,6]	(5.67) [144,1]	(1.75) [44,5]	(13.67) [347,3]	(12.42) [315,6]	(6.25) [158,8]	(16.54) [420,2]	(10.29) [261,4]	(6.25) [158,8]	(3.63) [92,1]	(2.38) [60,3]	(8.11) [206,1]	(6.25) [158,8]	(6.70) [170,1]	(5.45) [138,3]

LIST OF MAJOR COMPONENTS	
ITEM	DESCRIPTION
1	5DV BODY, (121269)
2	ELBOW 45 DEG WBXFT
3	ELBOW 45 DEG WBXTC
4	ELBOW 90 DEG BPE
5	FERRULE TRI-CLAMP BW
6	FERRULE TRI-CLAMP SW
7	TUBING

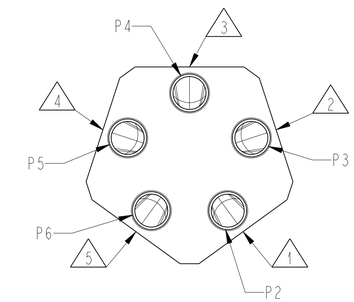

TAG NUMBERS						
	A VALVE ASSY	1 FIRST VALVE	2 SECOND VALVE	3 THIRD VALVE	4 FOURTH VALVE	5 FIFTH VALVE
1						

NOTES:
1. "P" NUMBERS INDICATE PORT CONNECTION
2. TUBE ENDS MEET OR EXCEED THE FOLLOWING TANGENT LENGTHS 1/4" - 1-1/2" = 1-1/2", 2" - 3" = 1-3/4"
3. VALVE MUST BE INSTALLED WITH P1 VERTICALLY (UP OR DOWN) FOR OPTIMAL DRAINABILITY.
4. (A) ALL ELBOW WELD WILL BE IN AS WELDED CONDITION, EXCEPT WHERE CONNECTED TO FERRULE.
5. FOR SIZES 1/4" & 3/8" BENT TUBING MAY BE USED FOR FABRICATION

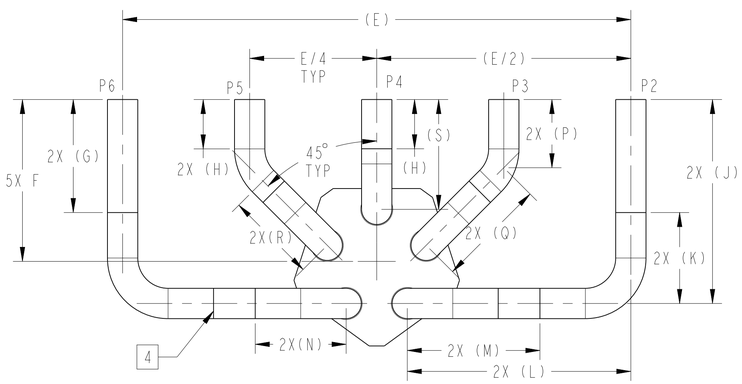

TOP VIEW

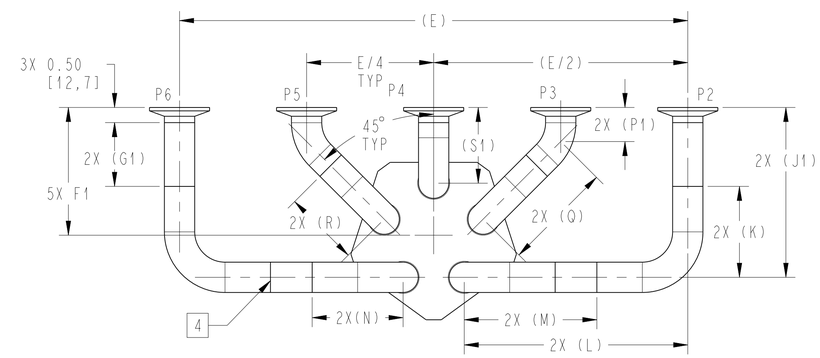

TOP VIEW

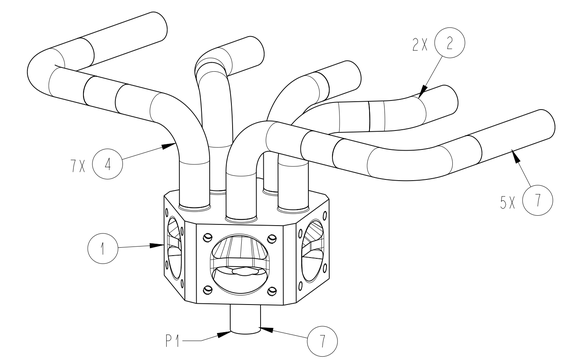

ISOMETRIC VIEW

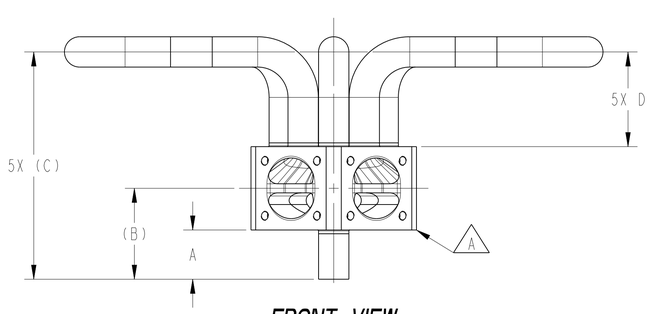

FRONT VIEW

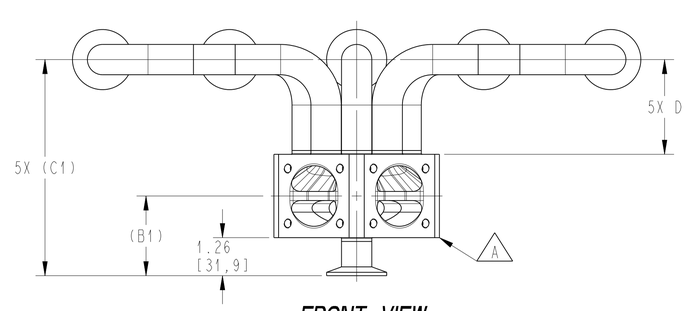

FRONT VIEW

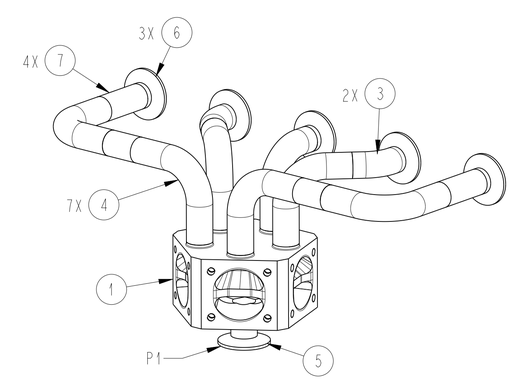

ISOMETRIC VIEW

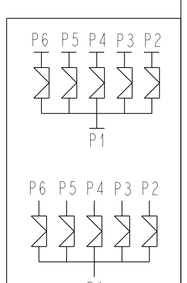

P & ID

PURE-FLO ORDER: - ITEM: -
CUSTOMER: -
CUSTOMER PO: -
OTHER INFO: -
-

THIS DOCUMENT IS THE SOLE PROPERTY OF ITT CORPORATION, OR ITS SUBSIDIARY, AND IS PROVIDED SUBJECT TO RETURN. IT IS ISSUED IN STRICT CONFIDENCE AND SHALL NOT BE REPRODUCED, OR COPIED, OR DISCLOSED IN WHOLE OR IN PART, OR USED AS THE BASIS FOR THE MANUFACTURE OR SALES OF APPARATUS OR PARTS TO WHICH THE DOCUMENT RELATES, WITHOUT THE EXPRESS WRITTEN CONSENT OF ITT CORPORATION, OR ITS SUBSIDIARY. THIS LEGEND SHALL BE MARKED ON ANY REPRODUCTION HEREOF, IN WHOLE OR IN PART. ALL RIGHTS TO THE INFORMATION AND DESIGN DISCLOSED HEREIN ARE RESERVED TO ITT CORPORATION, OR ITS SUBSIDIARY.

THIRD ANGLE PROJECTION

UNLESS OTHERWISE SPECIFIED, ALL DIMENSIONS ARE IN INCHES

UNLESS OTHERWISE NOTED

INCH	MM
X : ± 0.06	X : ± 1,5
.X : ± 0.06	.X : ± 1,5
.XX : ± 0.06	.XX : ± .5
.XXX : ± 0.02	
X/X : ± 1/16	
X° : ± .5°	X° : ± .5°
X' : ± 1°	X' : ± 1°

	DATE	BY
DWN	07/07/21	LFV
CHKD	07/07/21	KRP
APVD	07/07/21	TJS

1/4" TO 3" 5-WAY DIVERT VALVE ASSY. OPTION 3
TCE & AWE TABULATED
-
-

MASTER DWG: A31589/A ECN# 18436

ITT Pure-Flo www.ittpureflo.com

D A31589 SHEET 1 OF 1 REV A

ISSUE BY: - CERT BY: -

CD_PF1_D 08/15/11